Proceedings of the Institute of Radio Engineers
Volume 18, Number 7 *July, 1930*

DESIGN OF A PORTABLE TEMPERATURE-CONTROLLED PIEZO OSCILLATOR*

By

V. E. Heaton and W. H. Brattain
(Ratio Section, Bureau of Standards, Washington, D. C.)

Summary—*This paper describes the essential details of a portable shielded temperature-controlled piezo oscillator constant in frequency to better than one part in 100,000. The quartz plate is mounted in a special plate holder so that the air-gap changes very little as the quartz plate shifts in the holder. The plate holder is mounted in a thermal-attenuating chamber consisting of a copper cylinder and layers of asbestos, contained in a wooden box. The copper cylinder is mounted on heavy bronze coil springs to absorb shocks. A sensitive mercury thermostat, placed in a slot in the side of the copper cylinder, controls the temperature. The heater operates on 110 volts direct current.*

The quartz plate is connected between the grid and the filament of the oscillator tube. An inductor, having a natural frequency slightly higher than that of the quartz plate, is used in the plate circuit of the tube. The load is kept constant by loosely coupling to the output through a screen-grid radio-frequency amplifier.

Measurements on the piezo oscillator give the following results; temperature coefficient of 0.0025 per cent per degree centrigrade change in temperature of the quartz plate itself; 10 per cent variation of plate or filament voltages from operating point of the oscillator tube causes less than 1 part in 1,000,000 change: jarring has no measurable effect on the frequency.

I. Introduction

THERE is considerable demand for a portable temperature-controlled piezo oscillator of a high degree of constancy. As a result of considerable experimentation the bureau has made several portable temperature-controlled piezo oscillators, which on preliminary tests have remained constant in frequency to 1 part in 100,000. In order to obtain this constancy, careful consideration in design is necessary, especially in the small details.

A description of the essential details of these piezo oscillators is the purpose of this paper. However, any one wishing to construct such a piezo oscillator will find it necessary to overcome many small difficulties before he obtains, as a finished product, a good portable piezo oscillator. The apparatus is described in three parts, circuit arrangement, temperature control, and quartz plate with holder.

* Dewey decimal classification: 214. Published by permission of the Director of the Bureau of Standards of the Department of Commerce.

II. Circuit Arrangement

There are a number of circuit arrangements that might be used in the construction of a piezo oscillator. The one chosen had been found previously to be satisfactory, and in this work no attempt was made to compare the various types. A description of various circuit arrangements may be found in an article by A. Crossley.[1]

In the arrangement chosen the quartz plate is placed between the grid and the filament of the oscillator tube, and the inductance necessary to produce oscillation is placed in the plate circuit. This inductor is chosen with inductance and distributed capacity so that it has a natural frequency slightly higher than the frequency of the quartz plate without requiring any additional capacity to be shunted across it. A coil having low distributed capacity is best since it emphasizes the harmonics. A grid resistor of several megohms placed in parallel with the quartz plate serves to maintain a constant grid voltage on the oscillator tube.

The output from the piezo oscillator should not be used directly because a variable load at the output will cause a small variation in the frequency. To avoid such variations a constant output is used by means of a constant coupling to a radio-frequency amplifier. This amplifier may consist of one or more stages, depending on the amount of output desired. The coupling to this amplifier should be very loose in order to prevent a possible variation in frequency of the piezo oscillator caused by changes in the amount of power taken from the output of the amplifier. This coupling may be either capacitive or inductive.

A capacitive coupling which is the one chosen makes it a simple matter to change the amount of coupling and it also conserves space. The output circuit of this radio-frequency amplifier is a filter circuit consisting of a radio-frequency choke coil and two condensers. The direct current passes through the choke coil, while the radio-frequency current passes through the condenser to the output terminals. A screen-grid tube is used in the radio-frequency amplifier to prevent changes in the plate circuit from being reflected back into the grid circuit, consequently changing the frequency of the piezo oscillator.

There is also the possibility of external influences affecting the piezo oscillator frequency directly by means of stray coupling and, therefore, all the radio-frequency circuits of both the oscillator and the amplifier are thoroughly shielded by placing them in an aluminum cabinet with each joint connected by a brass angle. Thus it is necessary that all parts of the circuits except the quartz plate and instruments

[1] Proc. I.R.E., 15, 9; January, 1927.

be mounted on a bakelite subpanel which can be placed inside the cabinet after most of the wiring is done. The filament and plate voltages are carried from the outside through a cable to the place where these leads are soldered to the circuit. All connections inside the piezo oscillator are soldered securely. Radio-frequency choke coils are placed in each of the positive "B" battery leads and the radio-frequency current is by-passed by fixed condensers.

The entire circuit arrangement is shown in Fig. 1. The resistance R across the quartz plate, QP, is 7 megohms. The oscillator tube is of a 201-A type. Voltmeter V_1 is used to aid in adjusting the filament voltage. The inductor, L, is a honeycomb coil. As mentioned above, its inductance and distributed capacity give it a frequency above that

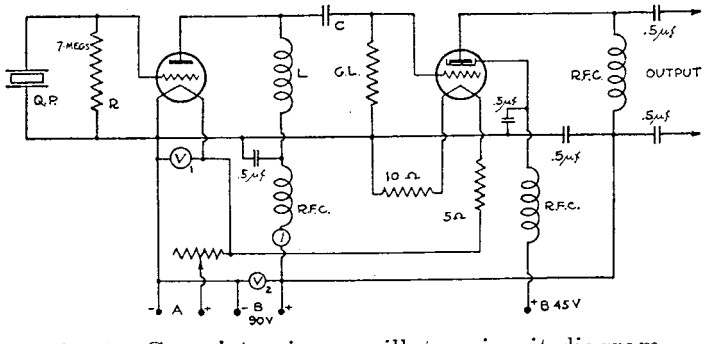

Fig. 1—Complete piezo-oscillator circuit diagram.

of the quartz plate. This difference in frequency is important and should be such that the quartz plate will oscillate freely but so that its amplitude of oscillation will not be very large. The voltmeter, V_2, indicates the plate voltage on the oscillator tube, and a 0-5 milliammeter, MA, serves to indicate whether or not the quartz plate is oscillating.

The amplifier is coupled to the oscillating circuit through the condenser C. A screen-grid tube is used in the amplifier, with 5- and 10-ohm resistors to give both the proper grid bias and to adapt this 3-volt tube to the 5-volt filament supply. The radio-frequency choke coils RFC have 60–85 mh inductance each with low internal capacity.

III. Temperature Control

A mounted quartz plate has a temperature coefficient of frequency the amount of which depends on the orientation of the plate with respect to the crystal axes, and on the air-gap between the metal electrodes and the quartz plate. The magnitude of this temperature coefficient of frequency for Curie cut quartz plates is of the order of 0.001 per cent to 0.003 per cent per degree Centigrade.

Variations in temperature with ordinary thermostatic control are usually a few tenths of a degree Centigrade. These variations include long-period changes resulting from gradual aging of the thermostat, short-period changes resulting from amplitude of operation of the thermostat, and variations of temperature with position in the temperature

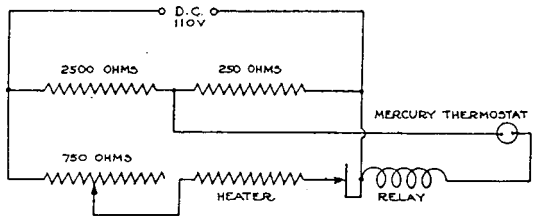

Fig. 2—Temperature-control circuit diagram.

controlled region. It is obvious, therefore, that in order to insure a constancy of 1 part per 100,000 an improved control had to be used.

The changes in the point at which the thermostat operates may usually be reduced to a negligible amount by a properly designed and

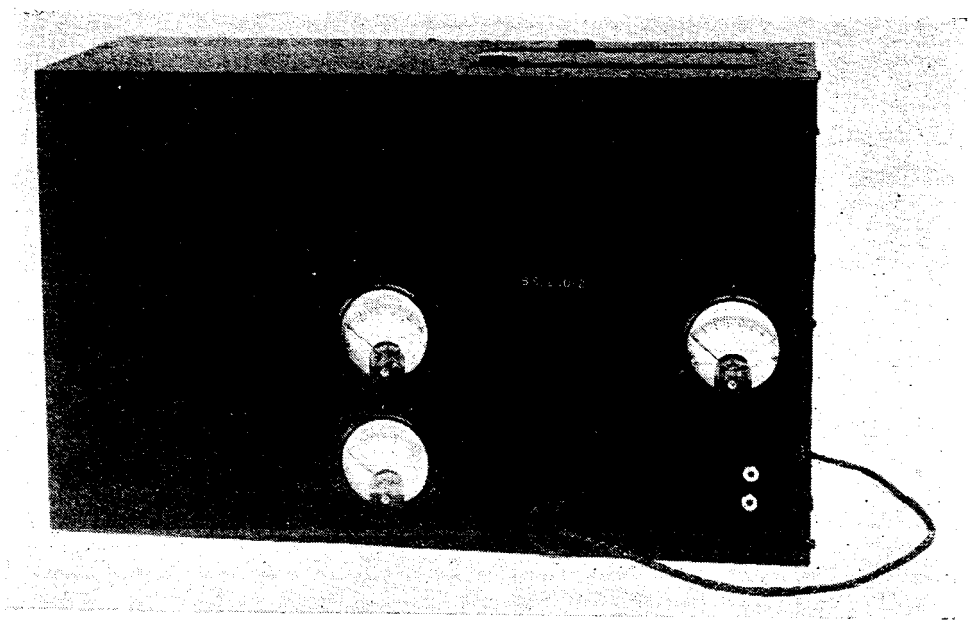

Fig. 3—Front view of piezo-oscillator.

aged mercury thermostat. The short-period changes can be greatly decreased by the method of attenuation as described by W. A. Marrison.[2] The essentials of the method are; first, a thermostat that will hold its operating temperature to within very narrow limits, and; second, a heating system such that the frequency of operation of the thermostat

[2] W. A. Marrison, "Thermostat design for frequency standards," Proc. I.R.E., 16, 976; July, 1928

will be of the order of once a minute, and; third, a thermal attenuation which will reduce the effect of the amplitude of thermostat operation. The variations with position in the thermostatically controlled chamber may, of course, be eliminated by fixing the position of the quartz plate in this chamber.

In the construction of the piezo oscillators described here, a heat-insulated box is made with walls of one-half inch pine and one-half inch Balsa wood. A hollow copper cylinder, three-eighths of an inch thick, is placed inside of the heat-insulated box. The copper cylinder is mounted on heavy bronze coil springs which serve to absorb shocks. The outside of the cylinder is covered with a thin layer of

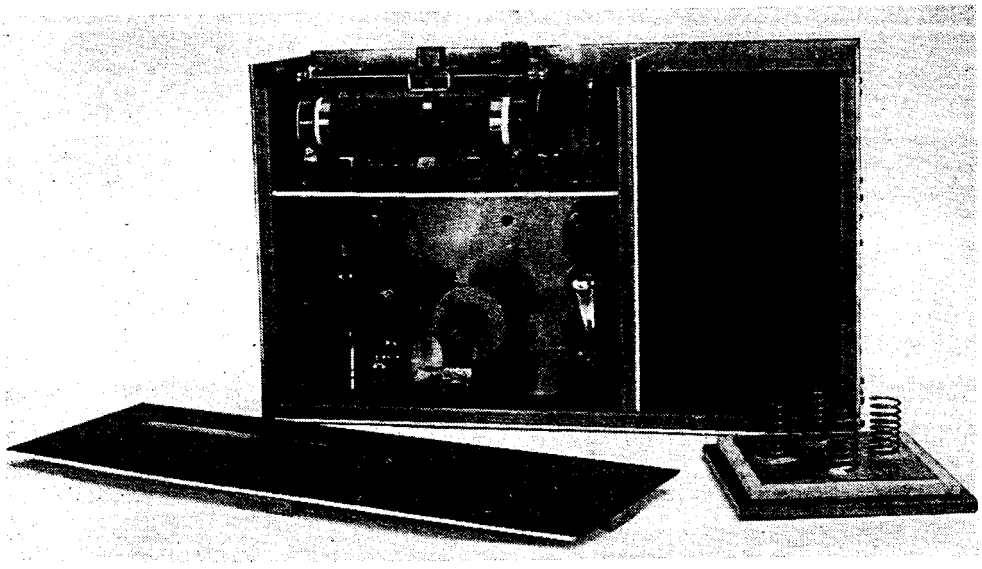

Fig. 4—A view of the piezo-oscillator with the back removed.

asbestos for insulation, and then is wound with nichrome wire, which serves as the heating unit. The nichrome wire is wound so that there are more turns per unit length on each end than in the middle of the cylinder in order to compensate for the heat losses through the ends of the cylinder. A mercury thermostat is used to control the heating current. This thermostat has a sensitivity of 4 deg. C per inch of bore. The thermostat is placed in a groove in the copper cylinder under the heating wire and in close thermal contact with it. A hole drilled deep into the wall of the copper cylinder and parallel to its axis serves as a thermometer well. The inside of the cylinder is lined with asbestos, 3/8 in. thick. Lengthwise of the copper cylinder the space is broken up into three compartments by asbestos disks. The quartz plate and holder are placed in the central compartment, and the other two serve to decrease the end effects. The heating unit operates on

110 volts d.c. The temperature-control circuit shown in Fig. 2 is so designed that the mercury thermostat, when closed, allows a current of 8 ma to flow through the relay which opens the heater circuit. This arrangement is used so that the voltage across the terminals of the thermostat, when open, is small. The thermostat, by means of the relay, turns on and off the entire heating current. This increases the frequency of operation of the thermostat and makes the temperature inside the cylinder independent of large variations in outside temperature. The 750-ohm rheostat is set so that the length of the period that the heating current is on is approximately equal to the length of the period that it is off.

The copper cylinder and one electrode of the plate holder are grounded to the aluminum cabinet. The other lead is brought out at the bottom of the cylinder and is well insulated. Since this lead is entirely surrounded by a conductor, the capacity between it and the conductor is independent of the position of the lead. The construction of this heating chamber is shown in Fig. 4.

IV. Quartz plate

Mounting—The quartz plate controls the frequency of the system and it is obvious that extreme care must be taken in its construction and mounting. Any good quartz plate with a good type of plate holder can be used, but the holder must be of a nature suitable for a portable instrument. The essentials are a quartz plate cut so that it is a good oscillator and so that it oscillates at a single frequency in the immediate range of the frequency desired and mounted in such a way that the change in frequency due to change in position of the quartz plate is very small. The spacer of the two electrodes must have a small temperature coefficient of expansion so as to diminish that part of the temperature coefficient of frequency, which is due to the change in air-gap.

The quartz plate actually used is cut as a cylinder, the cut used being the Curie cut. The dimensions are such that its thickness frequency corresponds to the required value. Care is taken to grind the two ends of the plate flat and parallel. The holder consists of two metal electrodes separated by means of a pyrex ring. The surfaces of the electrodes are ground flat and the edges of the pyrex ring are ground flat and parallel. The diameter of the pyrex ring is so chosen as to fit the cylindrical quartz plate to within one hundredth of an inch. Care in making the various surfaces flat and parallel assures that motion of the plate in the plate holder will not change the spacing and thereby change the frequency.

The pyrex ring is constructed thicker than the quartz plate to prevent the top electrode from touching the quartz plate. The amount of spacing or air-gap is determined so that it is approximately one-fourth of a wavelength of the supersonic sound waves generated by the quartz plate.[3] The exact spacing is unimportant as long as it is between zero and one half wavelength and is uniform throughout the space occupied by the crystal. A photograph of the mounting is shown in Fig. 5.

V. Results

Six of these piezo oscillators have been built in the past 18 months and thoroughly tested. The tests that were made on them were:

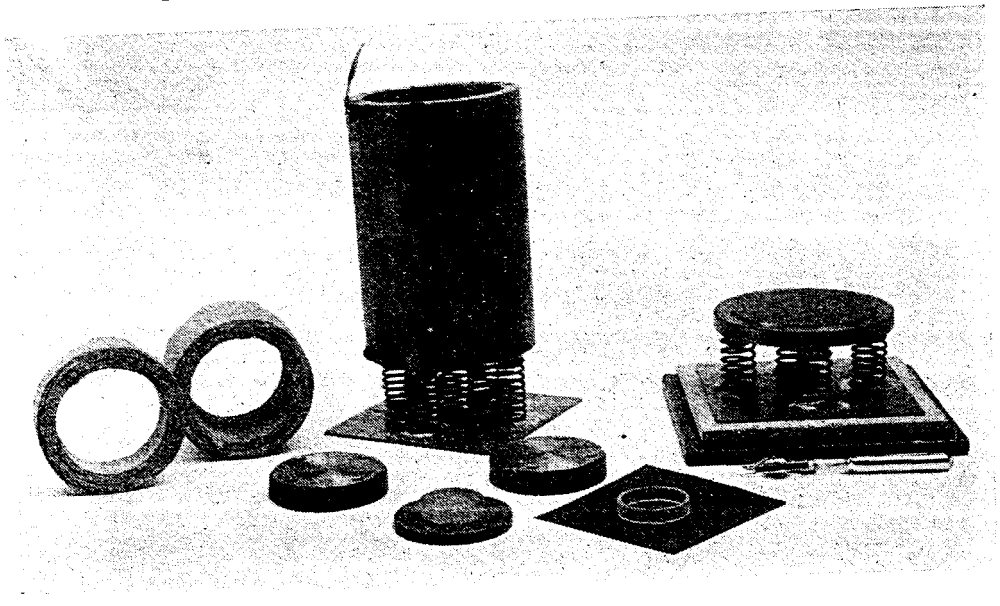

Fig. 5—Quartz plate holder, mercury thermostat, and attenuating cylinder.

determination of temperature coefficient of frequency; measurement of the variation of frequency due to variations in either plate voltage or filament voltage on the oscillator tube; measurement of the variation in frequency due to shocks and to moving; and measurements of the frequency periodically for several months.

The results of such tests in the case of the piezo oscillator described here are: temperature coefficient, 0.0025 per cent per degree Centigrade change in temperature of the quartz plate itself; ten per cent

[3] D. W. Dye, "Piezo-electric quartz resonator and equivalent electrical circuit," *Phys. Soc. Proc.*, **38**, 399–458; August, 1926. *Elec. Rev.*, **99**, 733–735, October 29, 1926. A. Hund, "Notes on quartz plates, air-gap effect and audio-frequency generation," Proc. I. R. E., **16**, 1072–1078, August, 1928.

variation of plate and filament voltages from operating point on oscillator tube (201-A) causes less than 1 part in 1,000,000 change; jarring the piezo oscillator has no measurable effect; tipping and moving it around causes a variation of frequency of approximately 7 parts in 1,000,000. Finally measurements taken once every day over a period of three months without disturbing the piezo oscillator show variations less than 5 parts in 1,000,000. It is possible that there may be a drift in frequency over a long period, but no experimental evidence of such a variation has been found.